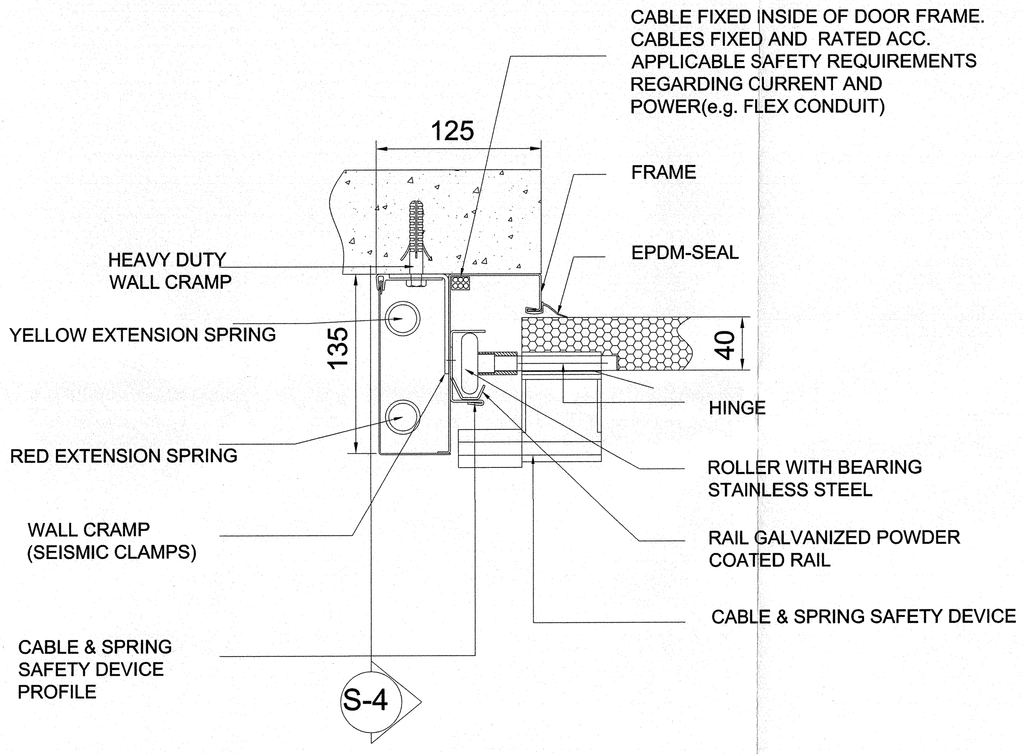

DETAIL-FRAME

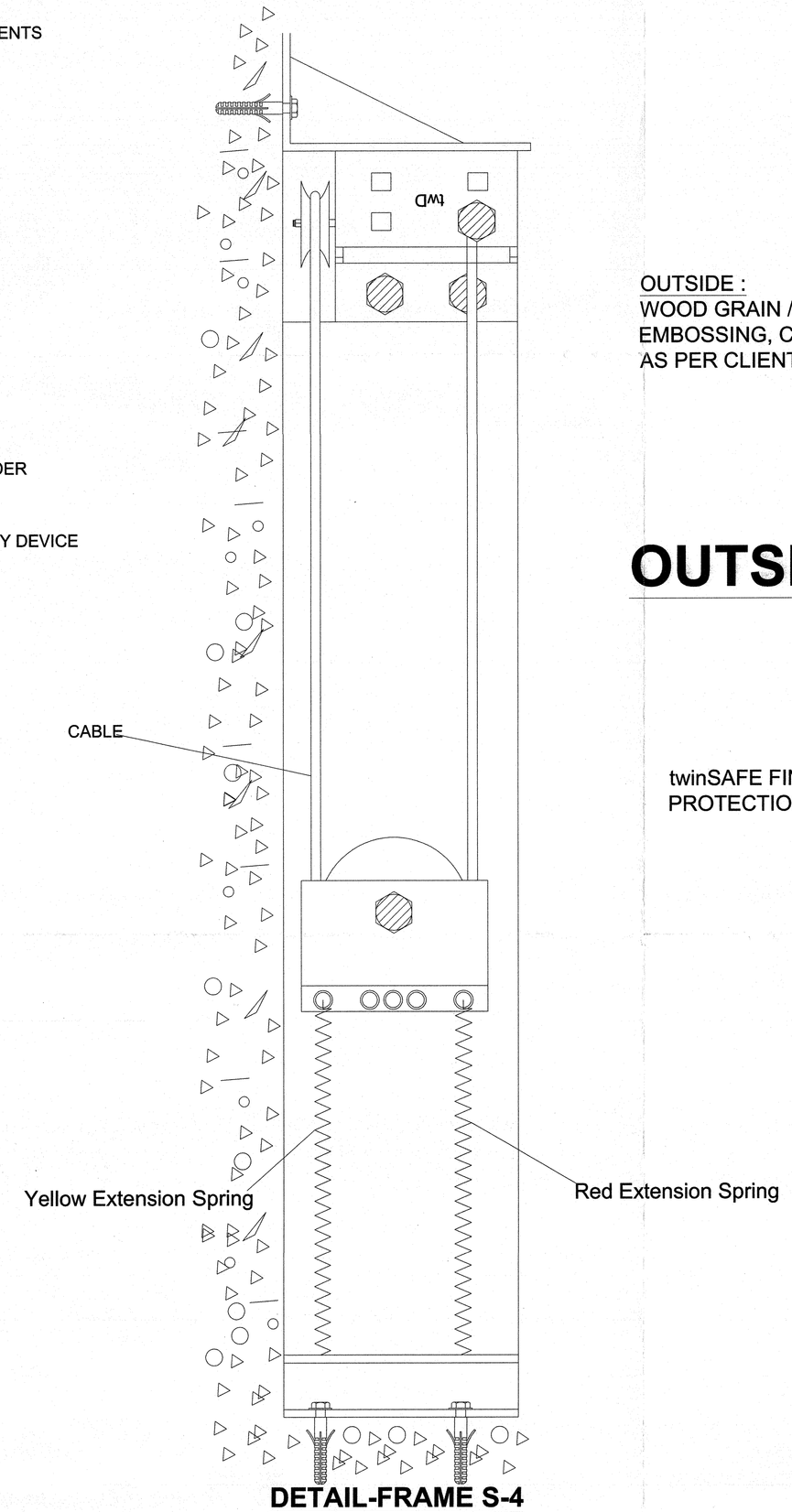

DETAIL-FRAME S-4

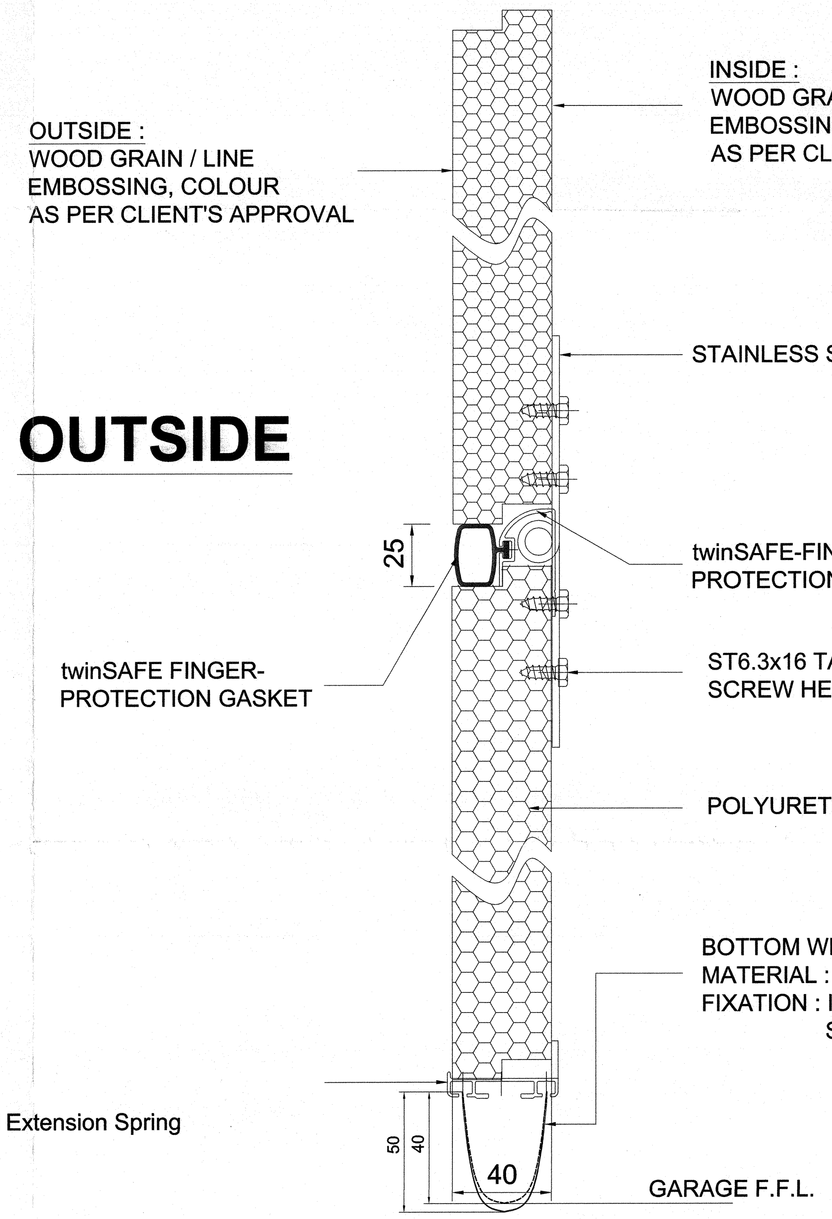

DETAIL-PANEL

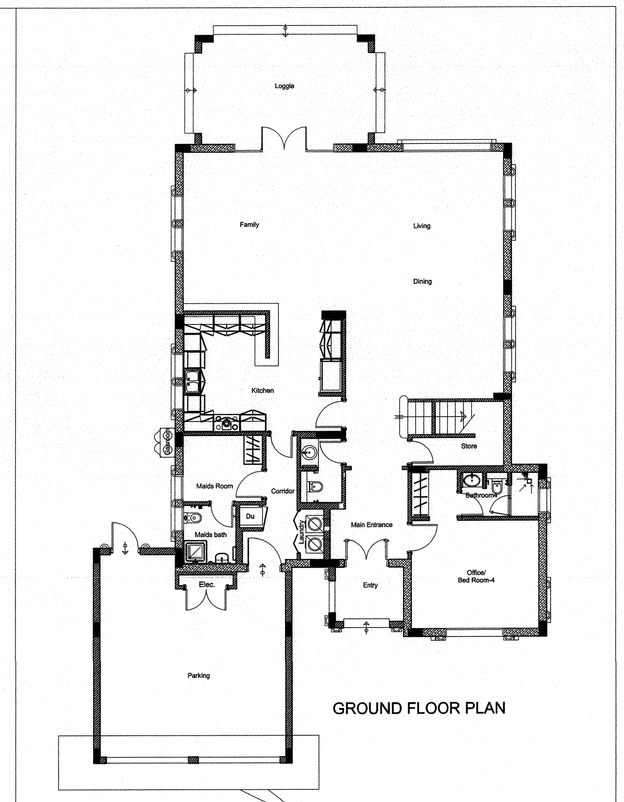

GROUND FLOOR PLAN

GARAGE DOOR

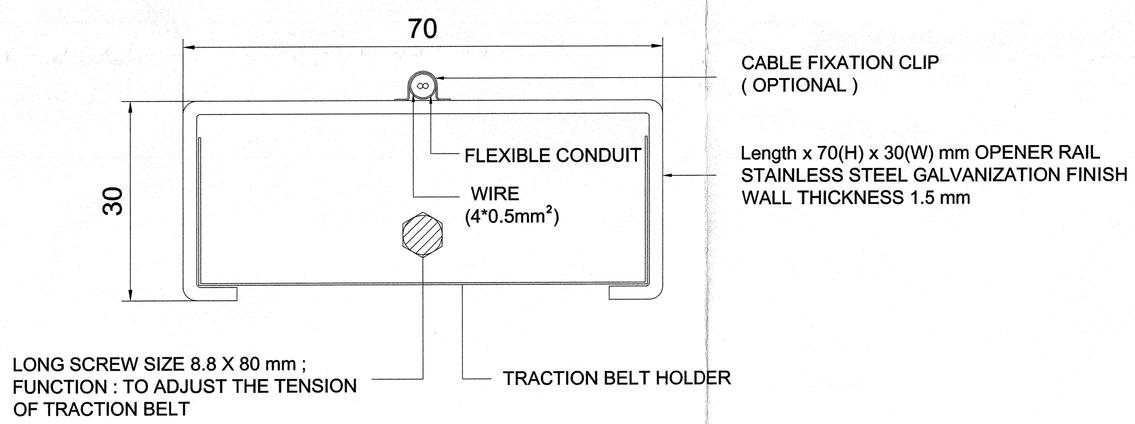

WIRING ON GDO-RAIL DETAIL

REQUIREMENTS OF CUSTOMER:

1:ALL FIXATION, INSTALLATION INCLUDING NECESSARY SUPPORT-FIXTURES ARE PART OF THIS OFFER

2:CEILING FIXATION-SUPPORT PROVIDED BY twinDOOR ACCORDING EACH GARAGE'S FINAL DIMENSIONS (WITH REFERENCE TO MAIN CONTRACTORS DRAWINGS)

INSTALLATION:

1:DOORS ARE BEING PRODUCED TO DIMENSION AND CONSTRUCTUAL CONDITIONS PROVIDED BY MAIN CONTRACTOR AND DISCUSSED WITH twinDOOR, twinDOOR WILL IN RETURN DISCUSS ANY DISCREPANCY AND DISCUSS CHANGE IN DESIGN WITH MAIN CONTRACTOR

SPECIFICATION:

HINGES: STAINLESS-STEEL

SPRING SYSTEM: EXTENSION SPRINGS VERTICAL
TWO SPRINGS AT BOTH SIDES WITH COLOR CODING:
RED EXTENSION SPRING (60N/m)
YELLOW EXTENSION SPRING (75N/m)

HARDWARE: twinDOOR twD-2000 W HARDWARE

OPERATOR: twD S-401(800N)

UNITS:
ALL LENGTH-UNITS IN [mm]

dar al-handasah shair and partners

- CODE 1 APPROVED
- CODE 2 APPROVED AS NOTED — WORK MAY PROCEED SUBJECT TO INCORPORATION OF INDICATED COMMENTS
- CODE 3 RESUBMIT FOR APPROVAL — WORK MAY NOT PROCEED
- CODE 4 REJECTED

BY: DATE:

Approval shall not relieve the contractor of any of his obligations under the Contract or constitute authorisation of any change to Contract Documents or variation to the works. Contractor is responsible for dimensions, quantities and coordination with other trades.

Arch.: Conditional 16/08/2012

18/8/12

DAR AL HANDASAH 16 AUG 2012 PKG 2&2A

1	REV.4	14 /08 /2012
S/N.	DESCRIPTION/ISSUE	DATE

AS BUILT DRAWING

PROJECT

JUMEIRAH PARK 2 & 2A

CLIENT

NAKHEEL

P.O. BOX : 17777 , DUBAI , U.A.E.
PHONE : + 971 - 4 - 3903388
FAX : + 971 - 4 - 3903335
WebSite : www.nakheel.ae
E - MAIL : info@nakheel.ae

CONSULTANT

dar al-handasah shair and partners

P.O. BOX : 55624 , DUBAI , U.A.E.
PHONE : + 971 - 4 - 335502
FAX : + 971 - 4 - 33353121
www.dargroup.com

MAIN CONTRACTOR

PAULING MIDDLE EAST CO.L.L.C.

P.O. BOX : 45176 , ABU DHABI , U.A.E.
PHONE : + 971 - 2 - 6329922
FAX : + 971 - 2 - 6325553
E - MAIL : pauling1@emirates .net .ae

SUB CONTRACTOR

twinBAU Building Materials Trading

PHONE : + 971 - 4 - 3415898
FAX : + 971 - 4 - 3415899
E - MAIL : twinbau@twindoor.eu

DRAWING TITLE

SECTIONAL OVERHEAD GARAGE DOOR
(DOOR STRUCTURE DETAILS)

DRAWN	CHECKED	APPROVED
DZ	AL	
REV.	SCALE	SHEETS
4	NOT IN SCALE	8 OF 8

DRAWING NO.
PME/JP/AB/
80170002-2800/2500
DOOR SUPPLIER

twinDOOR