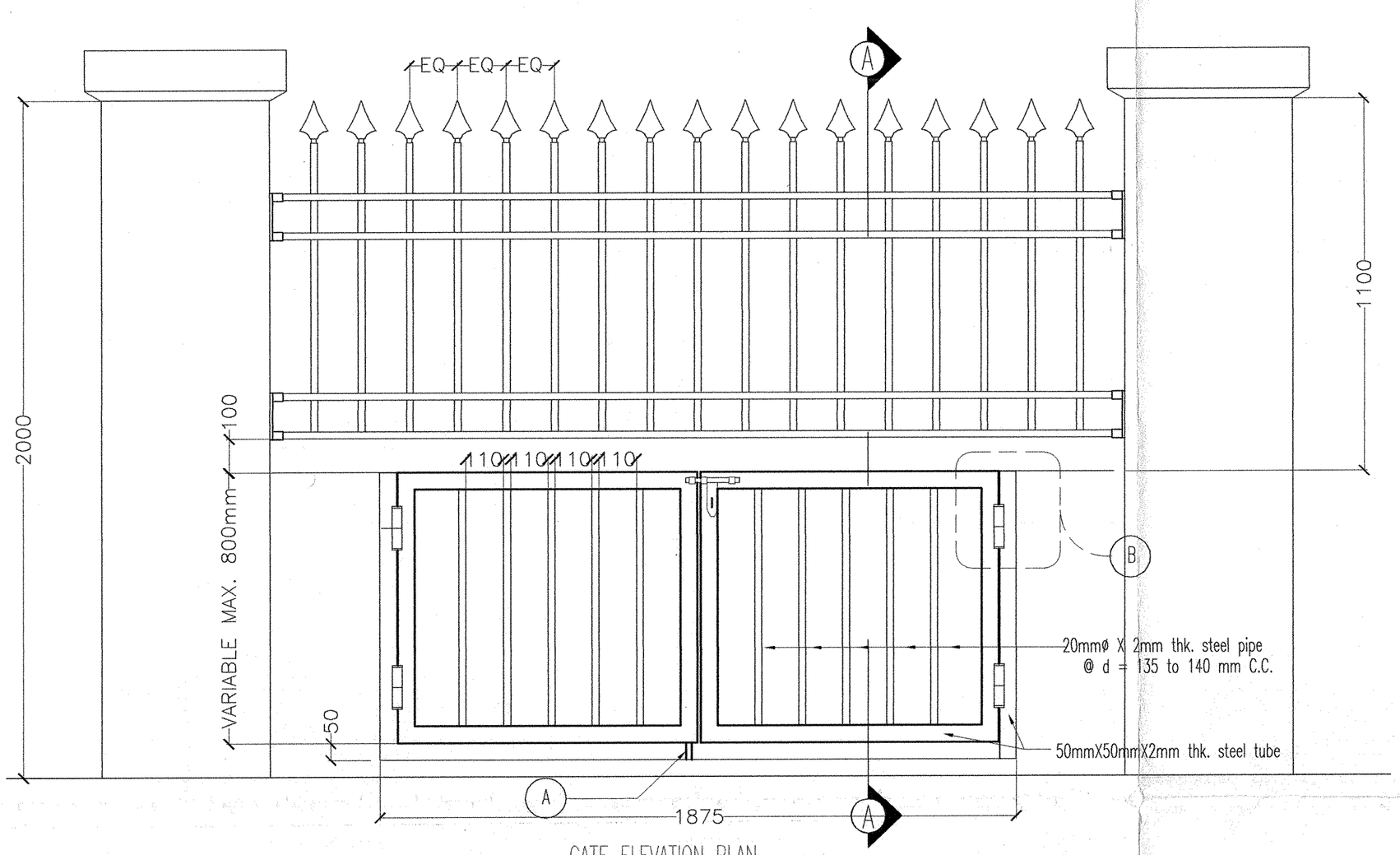

GATE ELEVATION PLAN

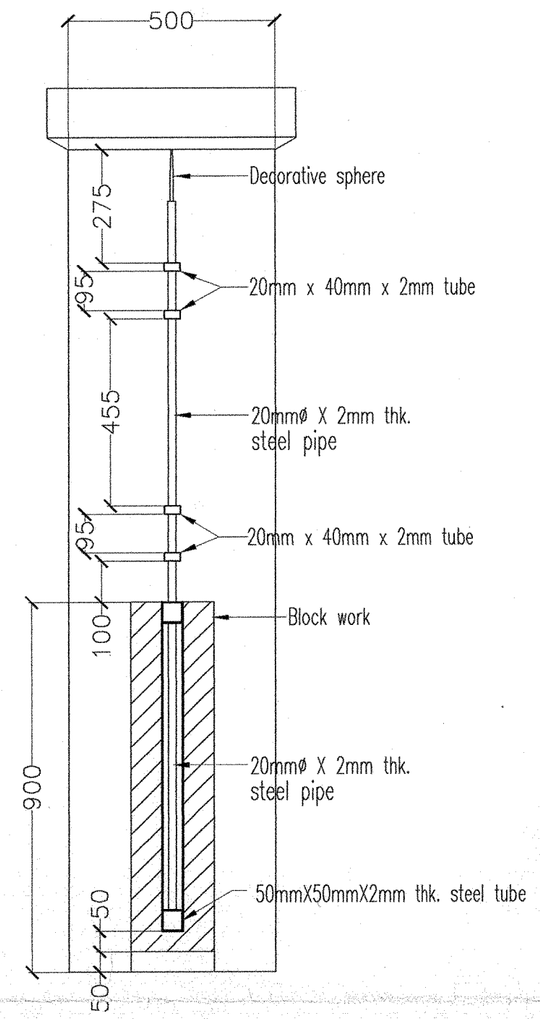

SECTION A–A

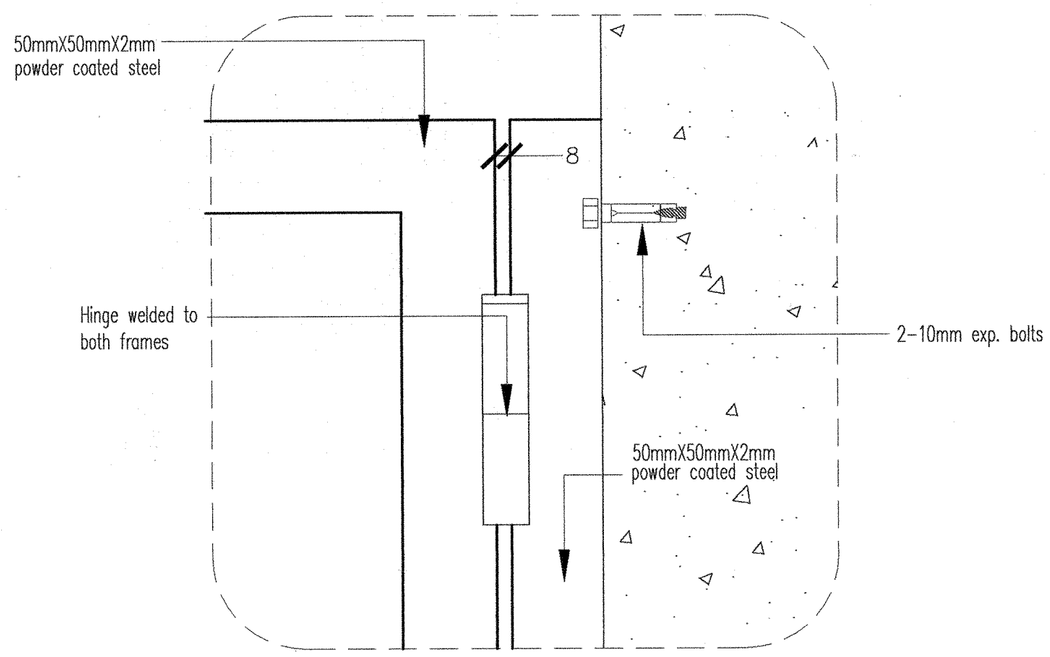

B GATE HINGE

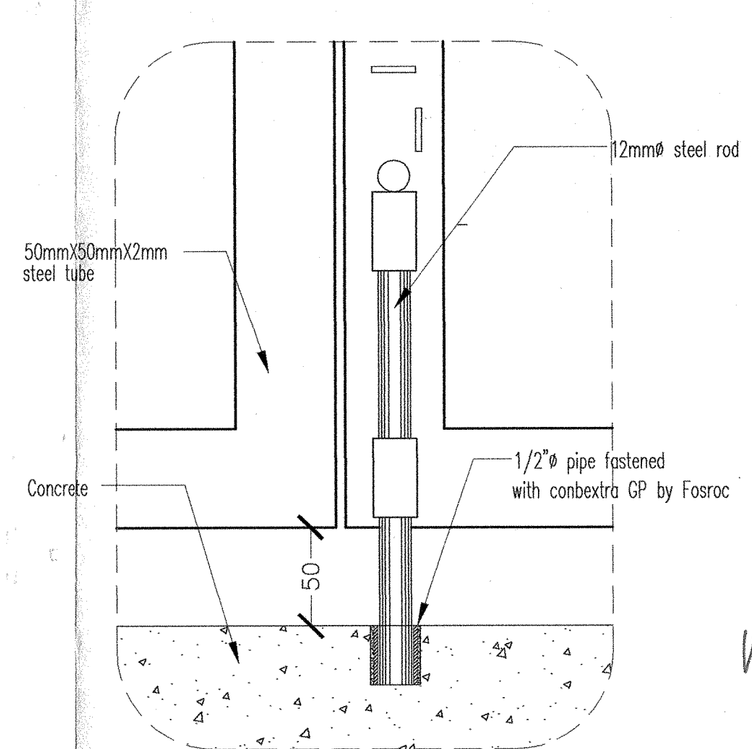

A ANCHOR BOLT

RECEIVED
12 JAN 2
DAR AL HANDASAH
DM/52/2

dar al-handasah
Shair and Partners

- [x] CODE 1 APPROVED
- [ ] CODE 2 APPROVED AS NOTED
  WORK MAY PROCEED SUBJECT TO INCORPORATION OF ENDORSED COMMENTS
- [ ] CODE 3 RESUBMIT FOR APPROVAL
  WORK MAY NOT PROCEED
- [ ] CODE 4 REJECTED

BY: DATE:

Approval shall not relieve the contractor of any of his obligations under the Contract or constitute authorization of any change to Contract Documents or variation to the works. Contractor is responsible for dimensions, quantities and coordination with other trades.

AS BUILT DRAWING

PROJECT

525 VILLAS @ JUMEIRAH PARK
PACKAGE 2 AND 2A
JUMEIRAH, DUBAI

CLIENT

NAKHEEL
EMIRATES TOWERS
19th LEVEL
P.O.BOX - 17777
DUBAI - UAE
TEL : 04-3903388
FAX : 04-3903335

CONSULTANT

dar al-handasah
shair and partners
DUBAI - BEIRUT - CAIRO

MAIN CONTRACTOR

PAULING MIDDLE EAST
P.O. BOX 55624 ABU DHABI
PHONE : + 971-2-6329922
FAX : + 971-2-6325553

SUBCONTRACTOR

AL JAZEERAH
METALLIC INDUSTRIES
P.O. BOX : 95404
TEL. NO. 04 5441408
FAX NO. 04 5441409

TITLE

GARBAGE GATE
PLAN AND DETAILS

SCALE	EMIRATE	LOCATION	CHECKED
N.T.S	DUBAI	JUMEIRAH PARK	Eng.ZIYAD

Drawing no. PME/JP/AB/GARBAGE GATE–005

AB
A1
R2